Grahame Cook Plumbing Supplies Sales Pty Ltd
ABN 11 070 592 951

27 Loyalty Road
North Rocks NSW 2151 Australia

T 61 2 9630 5250
F 61 2 9683 3100

E info@cooksplumbing.com.au
www.cooksplumbing.com.au

Product Specification Sheet

Thermorail 240V Round Heated Towel Ladder 550x550x122mm Brushed Gold – SR25MBG

Heated Towel Rails are an affordable luxury for every bathroom for warming and drying your towels. This electric towel dryer is a 240v unit, which can be installed close to a wet area in the bathroom and controlled by an on/off switch or a timer. This model is a straight round profile which offers a sleek design in your bathroom.

.

- ✓ 240 Volt
- ✓ 41 Watts
- ✓ 4 Bar towel ladder
- ✓ Safe for use in bathrooms
- ✓ 304 Quality stainless steel
- ✓ Multiflex wiring all 4 legs
- ✓ Brushed Gold finish (also available in matte black, brushed stainless steel and gunmetal)

Thermogroup

GOOD HEATING PRODUCTS

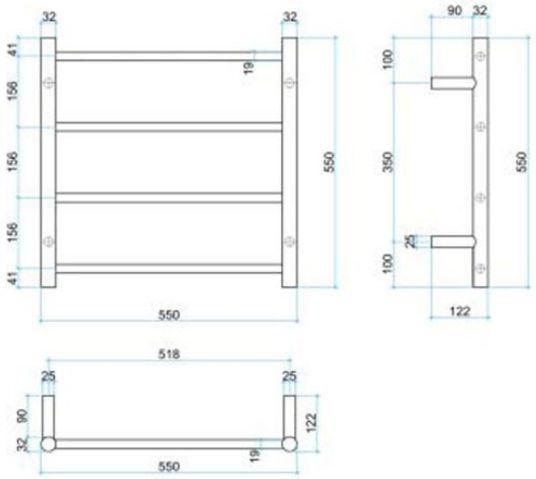

© Grahame Cook Plumbing Supplies Sales Pty Ltd
ABN 11 070 592 951

NB: Dimensions, specifications, drawings, colours and images are deemed correct at the time of publishing. Cooks Plumbing Supplies takes no liability as this information may be changed by the manufacturer without further notice. Please confirm all information prior to using the spefications in any building references.