TESORA
Rail Shower

2130001 | Brushed Nickel
2130006 | Brushed Brass
2130008 | Brushed Copper

WELS Rego: **S13248**

WELS 3 Star 9.0L/M (Handset Only) | MP Swivel Spout

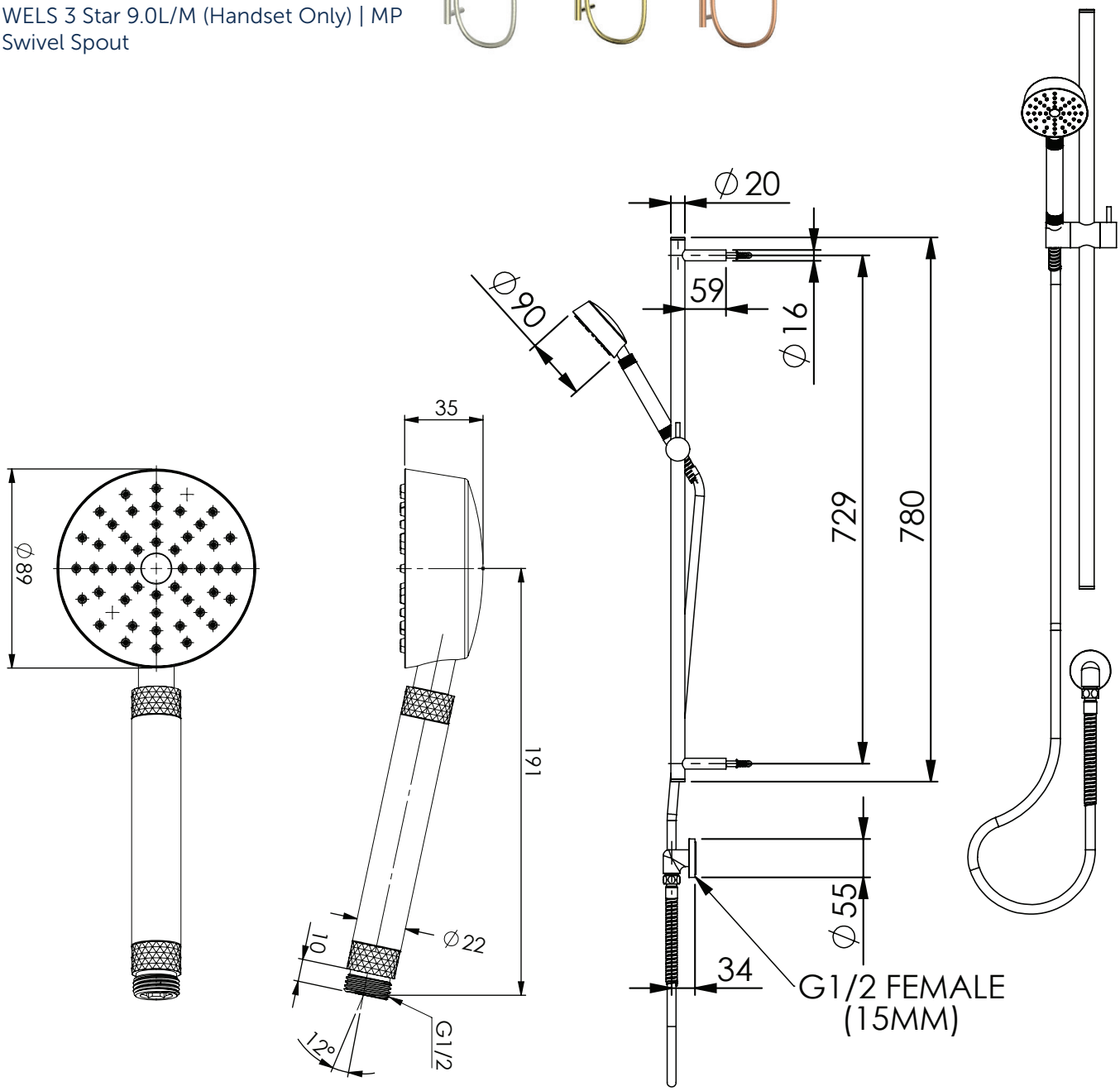

AU PHONE - 1800 244 487
EMAIL - aussales@greenstapware.com
WEBSITE - greenstapware.com.au

GREENS
where life meets water