Grahame Cook Plumbing Supplies Sales Pty Ltd
ABN 11 070 592 951

27 Loyalty Road
North Rocks NSW 2151 Australia

T 61 2 9630 5250
F 61 2 9683 3100

E info@cooksplumbing.com.au
www.cooksplumbing.com.au

Product Specification Sheet

Fino Round 379 Counter Top Basin Gloss White – FI379OCTB

This beautiful thin-rimmed basin features an organic design to suit any modern coastal bathroom. This basin is available in a range of finishes that perfectly complement any custom vanity with stone, marble or timber top.

- ✓ Double glazed fine fireclay
- ✓ Requires 32mm waste with overflow (sold separately)
- ✓ No tap holes
- ✓ Above counter mounting
- ✓ Gloss White finish (also available in matte white and matte grey)

TURNER HASTINGS

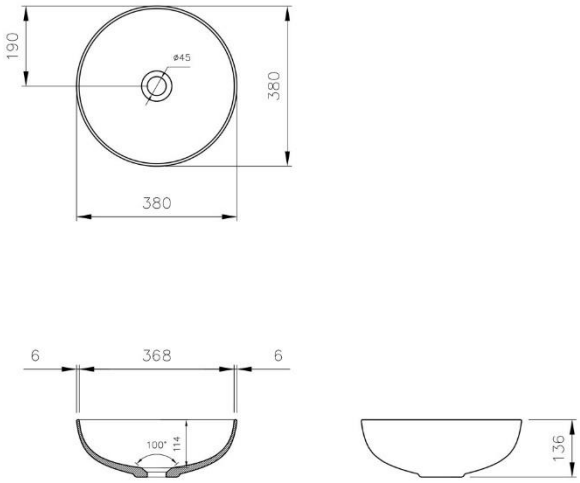

© Grahame Cook Plumbing Supplies Sales Pty Ltd
ABN 11 070 592 951

NB: Dimensions, specifications, drawings, colours and images are deemed correct at the time of publishing. Cooks Plumbing Supplies takes no liability as this information may be changed by the manufacturer without further notice. Please confirm all information prior to using the spefications in any building references.