Grahame Cook Plumbing Supplies Sales Pty Ltd
ABN 11 070 592 951

27 Loyalty Road
North Rocks NSW 2151 Australia

T 61 2 9630 5250
F 61 2 9683 3100

E info@cooksplumbing.com.au
www.cooksplumbing.com.au

Product Specification Sheet

Elvire 900 Right Hand Shelf Wall Basin 1TH Tasmanian Oak – CAEL0017WLW

The Elvire range of vanities and basins have been reimagined to create a considered and complete integrated design solution.

- ✓ Designed in Australia
- ✓ Featuring a signature sustainable Tasmanian timber front panel
- ✓ Right hand shelf (also available in left hand shelf)
- ✓ 01 taphole (also available in 0 taphole)
- ✓ Fully integrated enamelled steel basin and benchtop
- ✓ Available in right or left hand benchtop options
- ✓ Timber is sealed with a premium 2 pack polyurethane finish for durability and water resistance
- ✓ Integrated shroud to conceal piping
- ✓ Includes pop down plug and waste
- ✓ Overflow not available
- ✓ Tapware not included
- ✓ Tasmanian Oak finish (also available in Tasmanian blackwood)

CAROMA

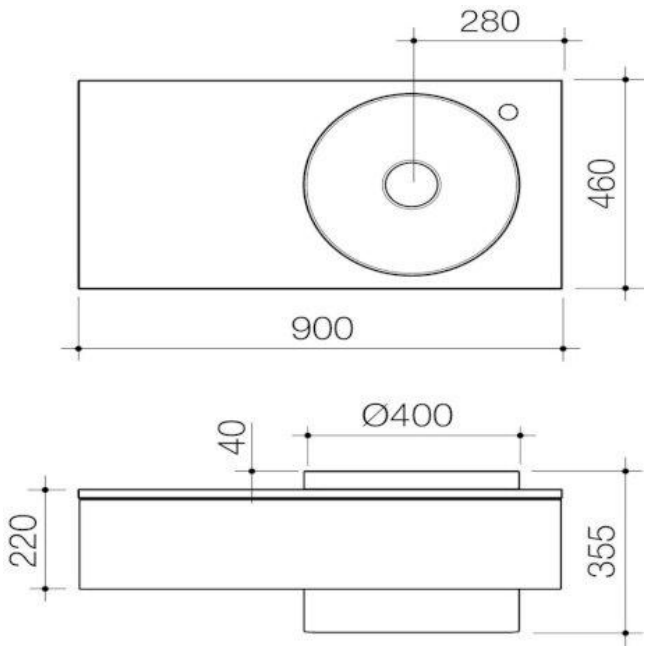

© Grahame Cook Plumbing Supplies Sales Pty Ltd
ABN 11 070 592 951

NB: Dimensions, specifications, drawings, colours and images are deemed correct at the time of publishing. Cooks Plumbing Supplies takes no liability as this information may be changed by the manufacturer without further notice. Please confirm all information prior to using the spefications in any building references.