Grahame Cook Plumbing Supplies Sales Pty Ltd
ABN 11 070 592 951

27 Loyalty Road
North Rocks NSW 2151 Australia

T 61 2 9630 5250
F 61 2 9683 3100

E info@cooksplumbing.com.au
www.cooksplumbing.com.au

Product Specification Sheet

Ecco Aquasoft+ 105 Rail Shower – 91087C3A

Sleek, minimalist and architectural, Ecco's clean lines and contemporary looks are enhanced with clever, eco-friendly features, such as a 6L/min water saving capacity. Ideal for those wanting to combine refined aesthetics with a quality shower experience that's kind to the environment.

- ✓ Exclusive Aquasoft Technology combines air and water to deliver a gentle yet invigorating shower
- ✓ Shower rail includes convenient, integrated chrome soap dish
- ✓ Easy clean silicone nozzles
- ✓ Smooth, silverflex shower hose for durability and easy cleaning
- ✓ WELS Not Star Rated, 6l/Min (Range F)
- ✓ Chrome finish

CAROMA

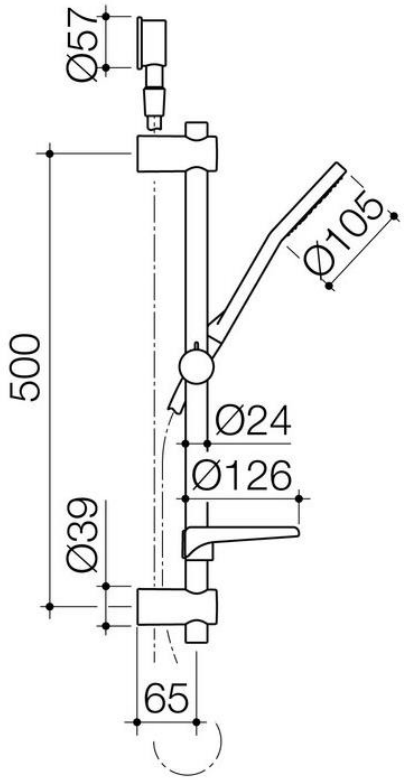

© Grahame Cook Plumbing Supplies Sales Pty Ltd
ABN 11 070 592 951

NB: Dimensions, specifications, drawings, colours and images are deemed correct at the time of publishing. Cooks Plumbing Supplies takes no liability as this information may be changed by the manufacturer without further notice. Please confirm all information prior to using the spefications in any building references.