Grahame Cook Plumbing Supplies Sales Pty Ltd
ABN 11 070 592 951

27 Loyalty Road
North Rocks NSW 2151 Australia

T 61 2 9630 5250
F 61 2 9683 3100

E info@cooksplumbing.com.au
www.cooksplumbing.com.au

Product Specification Sheet

Coolibah Contemporary Lever Bath Set 250mm – 90331C

Contemporary essentials that are well made, reliable and designed to modernise your bathroom

- ✓ Bath set with separate handles for hot and cold
- ✓ Lever handles
- ✓ Ceramic disc spindles
- ✓ 250mm reach wall bath outlet
- ✓ Chrome finish

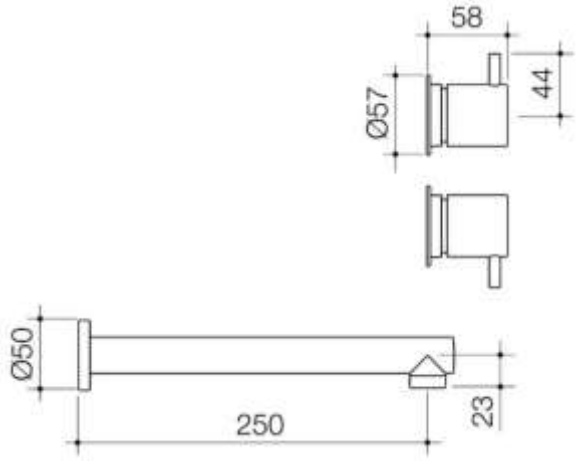

© Grahame Cook Plumbing Supplies Sales Pty Ltd
ABN 11 070 592 951

NB: Dimensions, specifications, drawings, colours and images are deemed correct at the time of publishing. Cooks Plumbing Supplies takes no liability as this information may be changed by the manufacturer without further notice. Please confirm all information prior to using the spefications in any building references.