ASTRO II
Pull-Down Sink Mixer

2543830 | T38264 | Chrome
2543831 | T38264 | Brushed Nickel
2543837 | T38264 | Matte Black
2543836 | T38264 | Brushed Brass
2543839 | T38264 | Gun Metal

WELS 5 Star 6.0L/M | Dual Function Spray
Swivel Spout

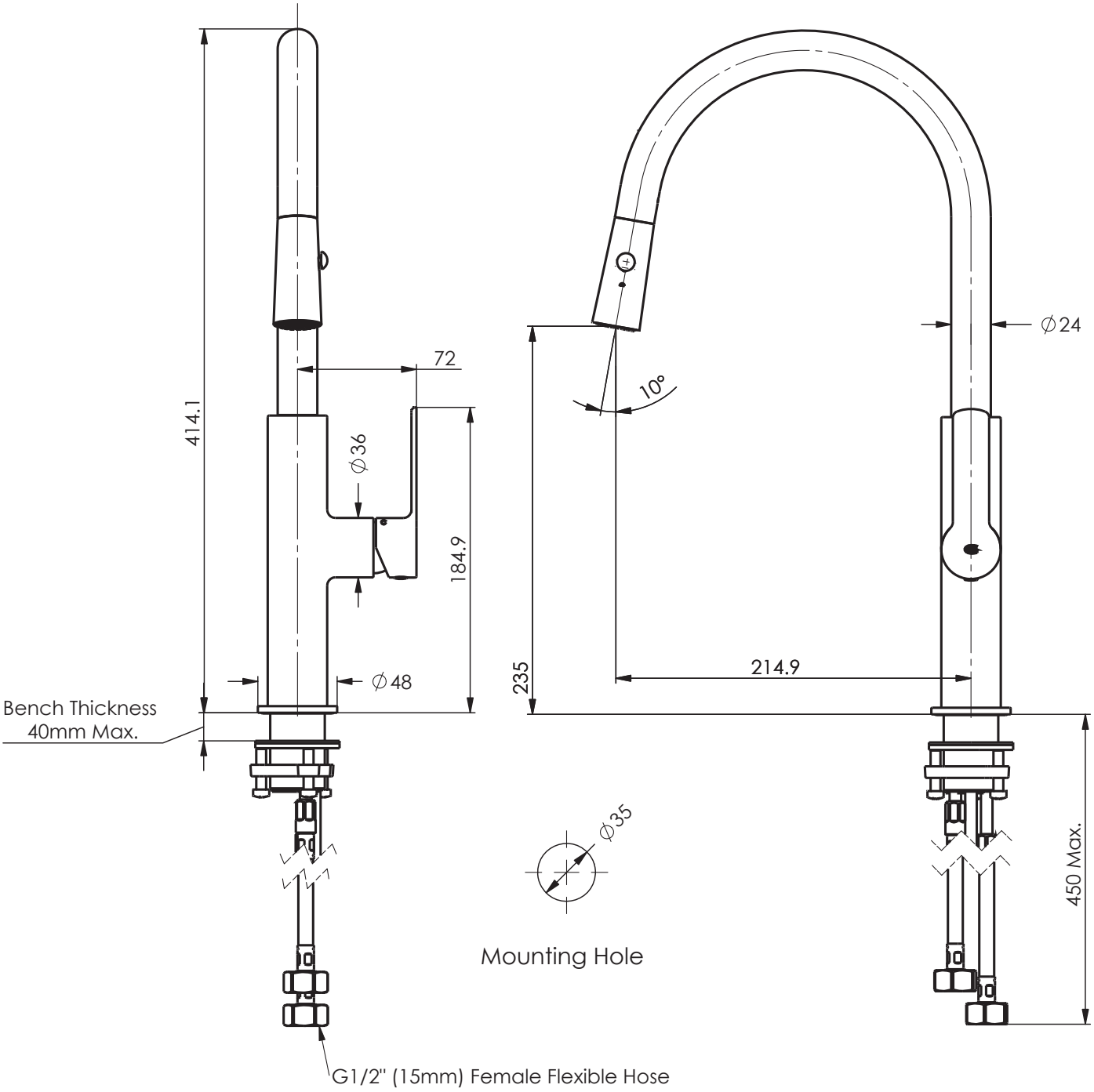

AU PHONE - 1800 244 487
EMAIL - aussales@greenstapware.com
WEBSITE - greenstapware.com.au

GREENS
where life meets water