Grahame Cook Plumbing Supplies Sales Pty Ltd
ABN 11 070 592 951

27 Loyalty Road
North Rocks NSW 2151 Australia

T 61 2 9630 5250
F 61 2 9683 3100

E info@cooksplumbing.com.au
www.cooksplumbing.com.au

Product Specification Sheet

Aroha Sink Mixer – 01-9229

The concept behind Aroha was to organically link the handle and body, as if they were one form. The floating handle gracefully rotates over the tap body, making Aroha a pleasure to use and behold.

- ✓ Sink mixer
- ✓ Suitable for mains pressure installation
- ✓ 25mm ceramic disc cartridge can be adjusted to reduce water temperature and flow control settings, saving energy
- ✓ Integrated base ring design; eliminating potential dirt build up and making cleaning easy
- ✓ WELS 4* rated, 7.5l/min flow rate
- ✓ Chrome finish

METHVEN

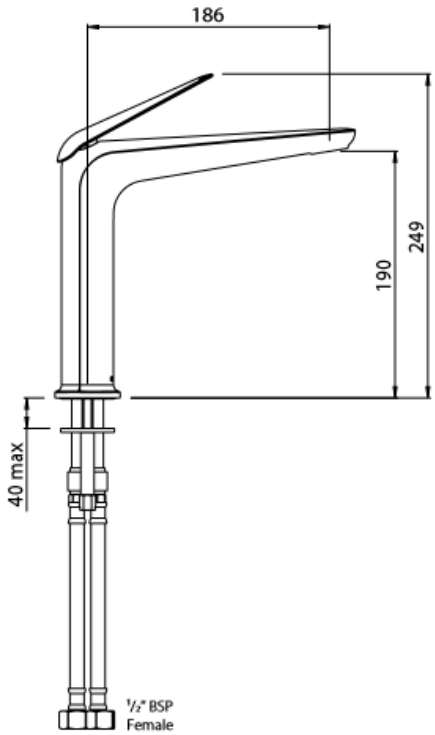

© Grahame Cook Plumbing Supplies Sales Pty Ltd
ABN 11 070 592 951

NB: Dimensions, specifications, drawings, colours and images are deemed correct at the time of publishing. Cooks Plumbing Supplies takes no liability as this information may be changed by the manufacturer without further notice. Please confirm all information prior to using the spefications in any building references.