Grahame Cook Plumbing Supplies Sales Pty Ltd
ABN 11 070 592 951

27 Loyalty Road
North Rocks NSW 2151 Australia

T 61 2 9630 5250
F 61 2 9683 3100

E info@cooksplumbing.com.au
www.cooksplumbing.com.au

# Product Specification Sheet

## Aio Mini Basin Mixer - AOBMCPAU

Aio tapware combines intriguing sculptural contours with modern minimalist design. With an integrated lever and body design, its sophisticated simplicity defies convention.

- ✓ A compact, single lever basin mixer making one-handed temperature and flow control easy
- ✓ Shorter height
- ✓ Lead free Eco Brass to protect water quality and for enhanced corrosion resistance
- ✓ Integrated base ring design; eliminating potential dirt build up and making cleaning easy
- ✓ WELS 4* rating
- ✓ Chrome finish

METHVEN

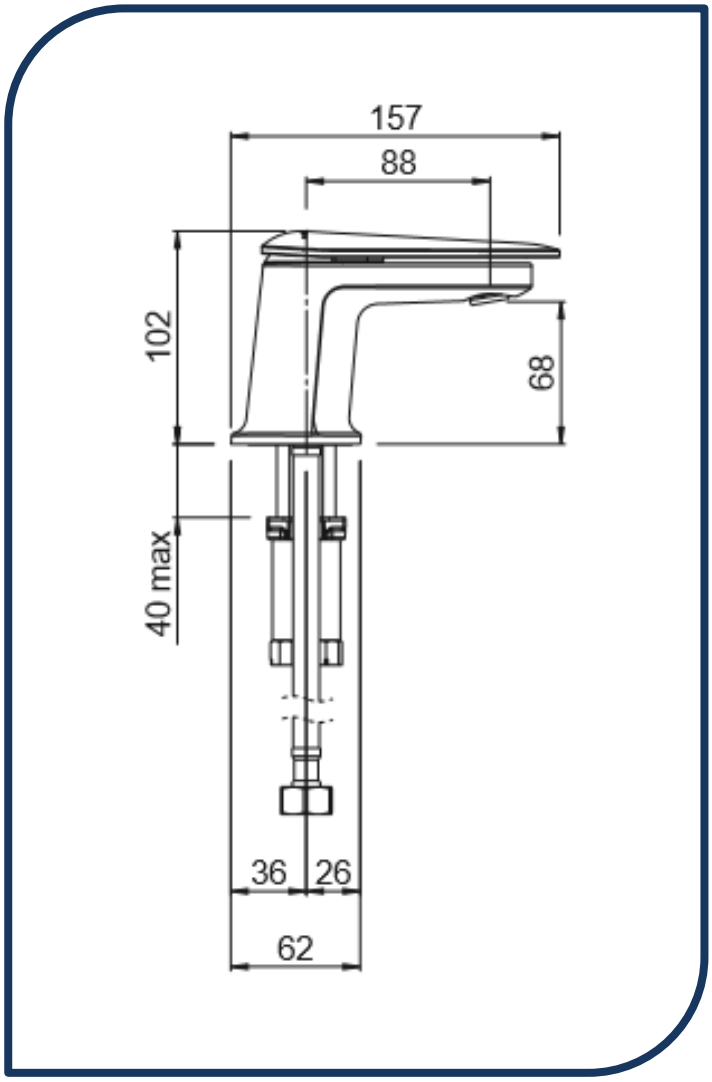


© Grahame Cook Plumbing Supplies Sales Pty Ltd
ABN 11 070 592 951

NB: Dimensions, specifications, drawings, colours and images are deemed correct at the time of publishing. Cooks Plumbing Supplies takes no liability as this information may be changed by the manufacturer without further notice. Please confirm all information prior to using the spefications in any building references.